# 1. General Description

## A: SPECIFICATION

### 1. PROPELLER SHAFT

| Model | | Except for STI model | STI model |
|---|---|---|---|
| Propeller shaft type | | EDJ | 3UJ |
| Front propeller shaft Joint-to-joint length: $L_1$ mm (in) | AT | 608 (23.94) | — |
| | MT | 668 (26.30) | 574 (22.60) |
| Rear propeller shaft Joint-to-Joint length: $L_2$ mm (in) | | 684 (26.93) | 706 (27.80) |
| Outer diameter of tube: mm (in) | $D_1$ | 63.5 (2.500) | 70 (2.756) |
| | $D_2$ | 57.5 (2.264) | 57 (2.244) |

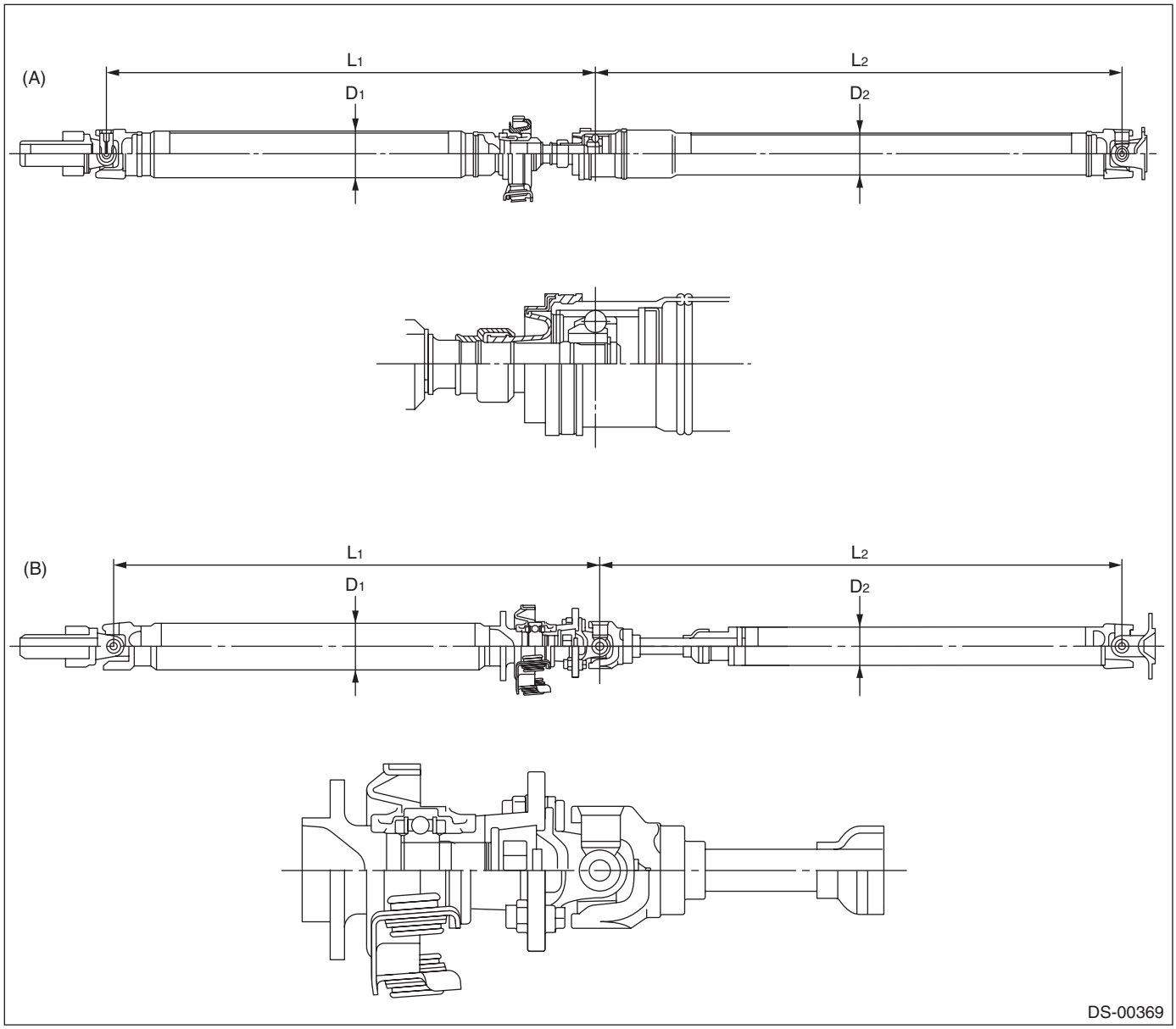


(A) EDJ-type (Except for STI model) (B) 3UJ-type (STI model)

## 2. FRONT DRIVE SHAFT ASSEMBLY

| Model | | Drive shaft type | Axle diameterϕ D mm (in) | Axle length L mm (in) |
|---|---|---|---|---|
| Sedan | Non-turbo, Turbo AT | BJ+PTJ | 26 (1.02) | 324.4 (12.77) |
| | Turbo MT (Except for STI model) | BJ+PTJ | | |
| | Turbo MT (STI model) | BJ+DOJ | 28 (1.10) | 295.6 (11.64) |
| Wagon | All models | BJ+PTJ | 26 (1.02) | 314.5 (12.38) |
| | | BJ+PTJ | | |

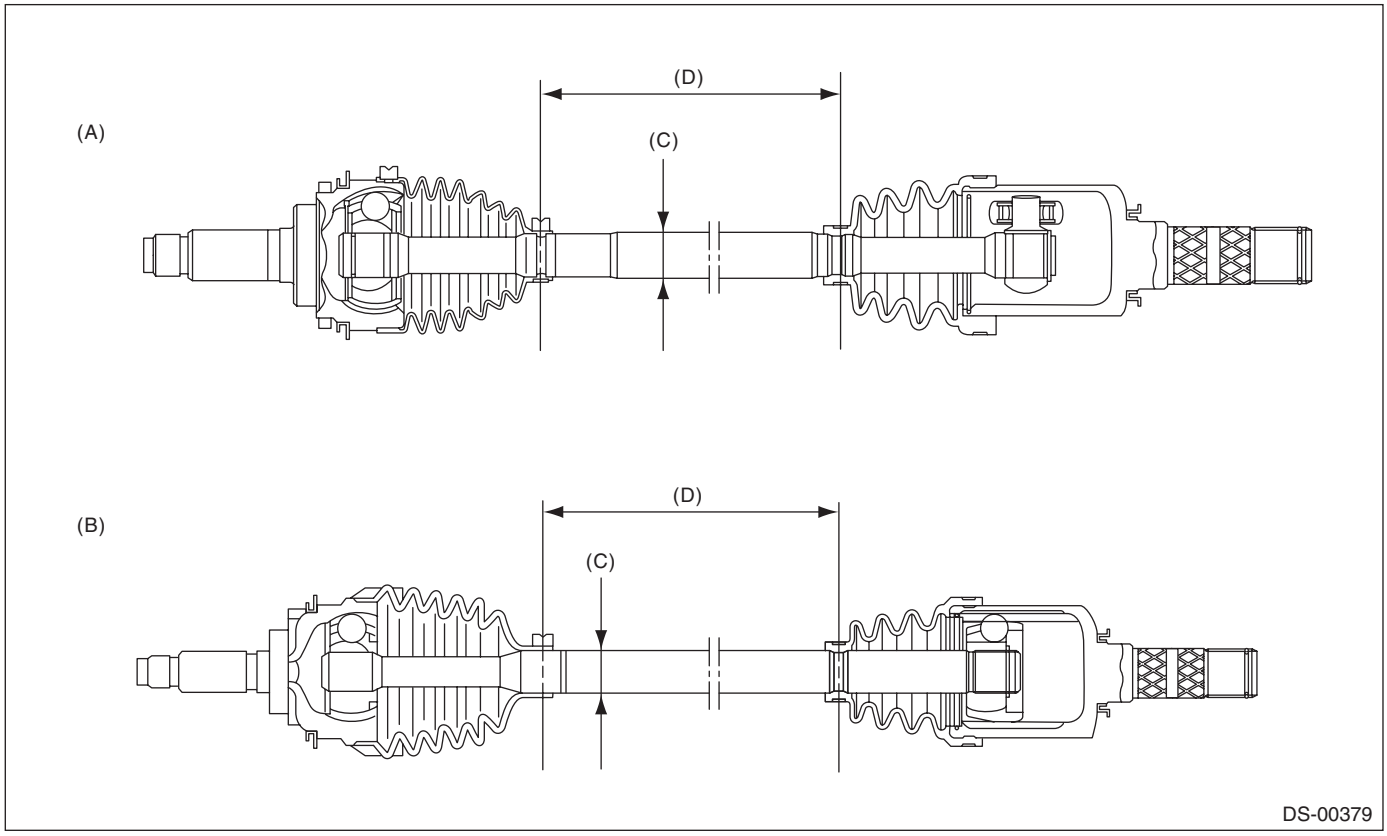


(A) BJ+PTJ
(B) BJ+DOJ
(C) Axle diameter D
(D) Axle length L

## 3. REAR DRIVE SHAFT ASSEMBLY

| Model | Drive shaft assembly type | No. of identification protrusion on shaft | Axle diameterϕ D mm (in) | Axle length L mm (in) |
|---|---|---|---|---|
| Sedan | EBJ+DOJ RH | 1 | 24 (0.94) | 367.4 (14.46) |
| | EBJ+DOJ LH | 0 | 24 (0.94) | 357.4 (14.07) |
| Wagon | EBJ+DOJ RH | 2 | 24 (0.94) | 357.5 (14.07) |
| | EBJ+DOJ LH | 1 | 24 (0.94) | 347.5 (13.68) |
| STI model | EBJ+EDJ | — | 25 (0.98) | 316 (12.44) |

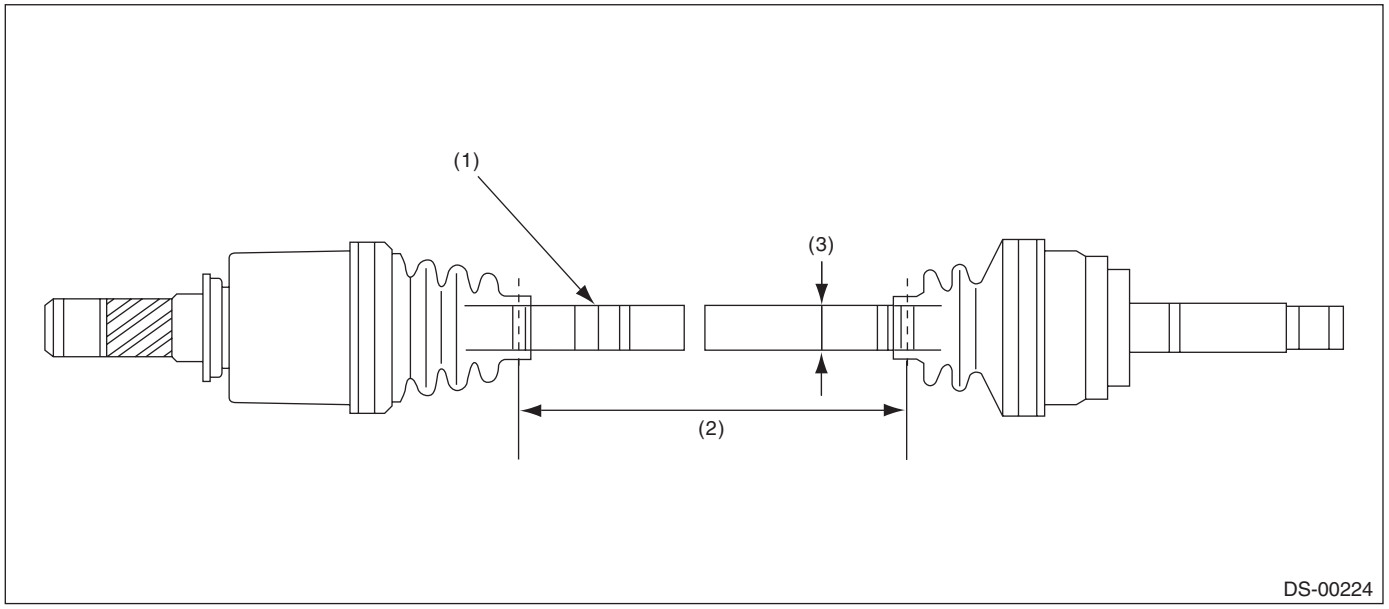


(1) Identification protrusion (2) Axle length L (3) Axle diameter D

# B: COMPONENT

## 1. PROPELLER SHAFT

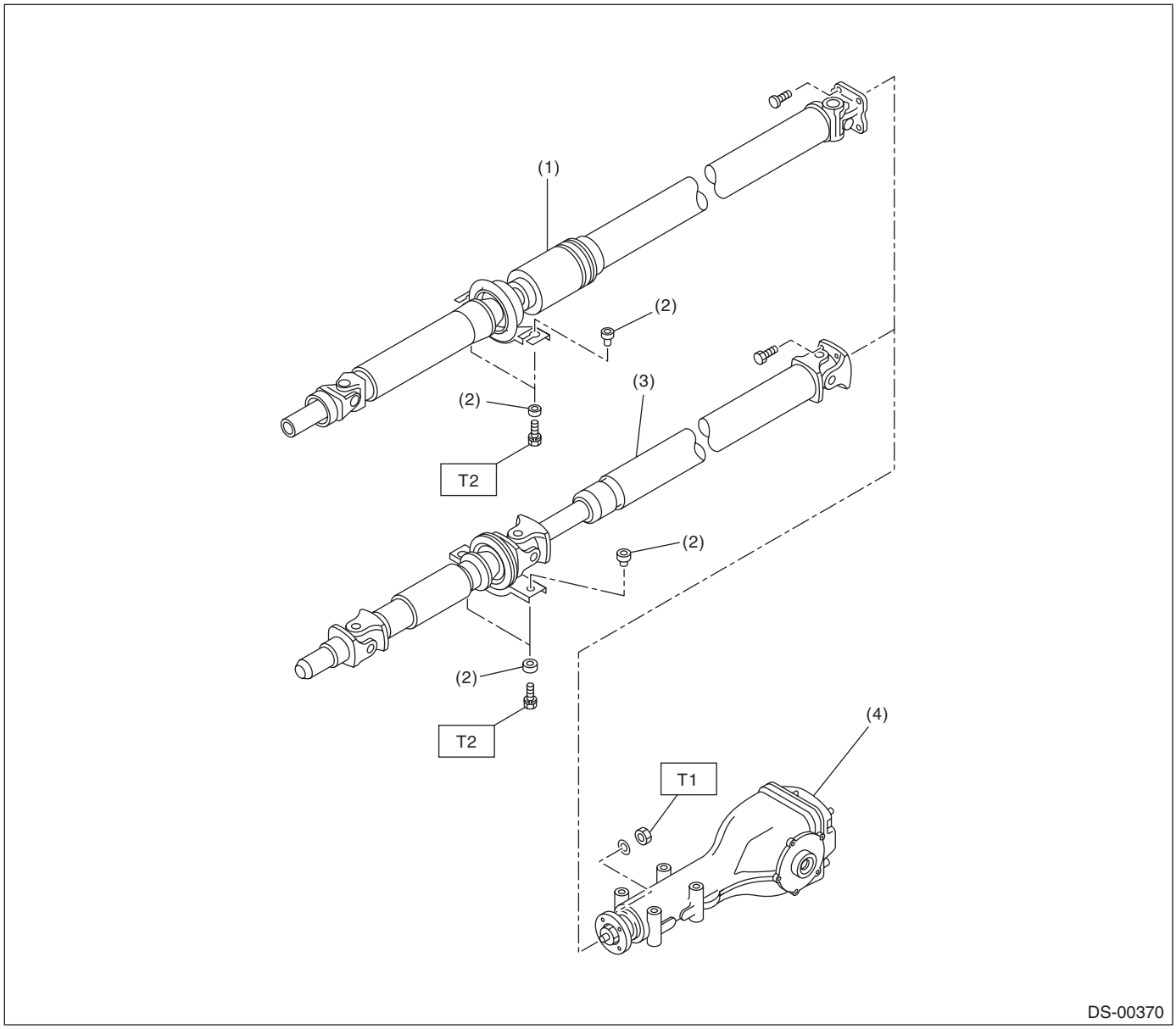


| | | | | |
|---|---|---|---|---|
| (1) | Propeller shaft (EDJ-type) (Except for STI model) | (3) | Propeller shaft (3UJ-type) (STI model) | ***Tightening torque:N·m (kgf-m, ft-lb)*** |
| (2) | Bushing | (4) | Rear differential | ***T1: 31 (3.2, 22.9)*** |
| | | | | ***T2: 52 (5.3, 38.3)*** |

## 2. FRONT AXLE

- BJ+PTJ-type

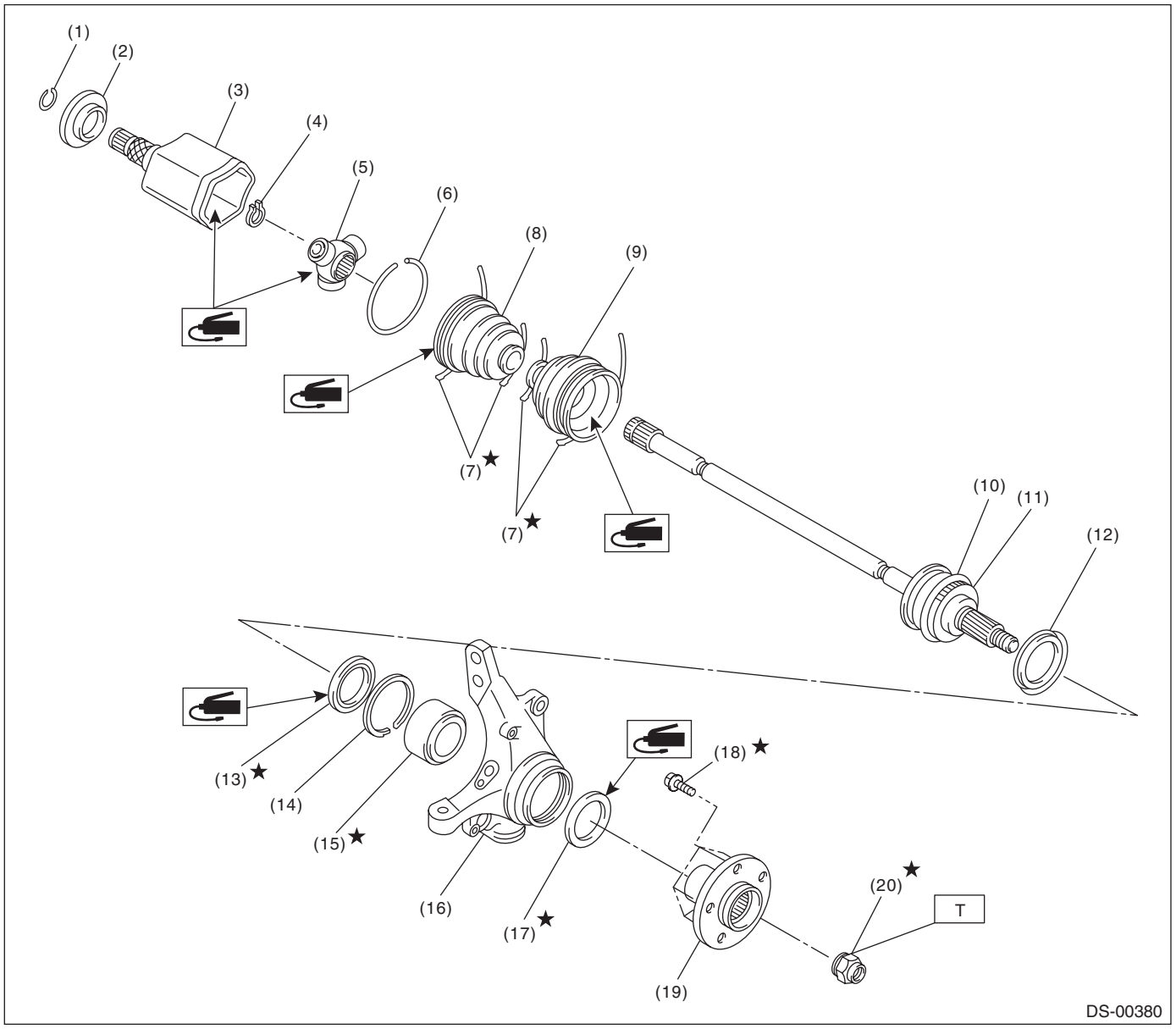


| | | | | | |
|---|---|---|---|---|---|
| (1) | Circlip | (9) | Boot (BJ) | (17) | Oil seal (outside) |
| (2) | Baffle plate (PTJ) | (10) | BJ ASSY | (18) | Hub bolt |
| (3) | Outer race (PTJ) | (11) | Tone wheel | (19) | Hub |
| (4) | Snap ring | (12) | Baffle plate | (20) | Axle nut |
| (5) | Trunnion | (13) | Oil seal (inside) | | |
| (6) | Snap ring | (14) | Snap ring | | |
| (7) | Boot band | (15) | Bearing | | |
| (8) | Boot (PTJ) | (16) | Housing | | |

***Tightening torque:N·m (kgf-m, ft-lb)***
***T: 220 (22.4, 162)***

- BJ+DOJ-Type

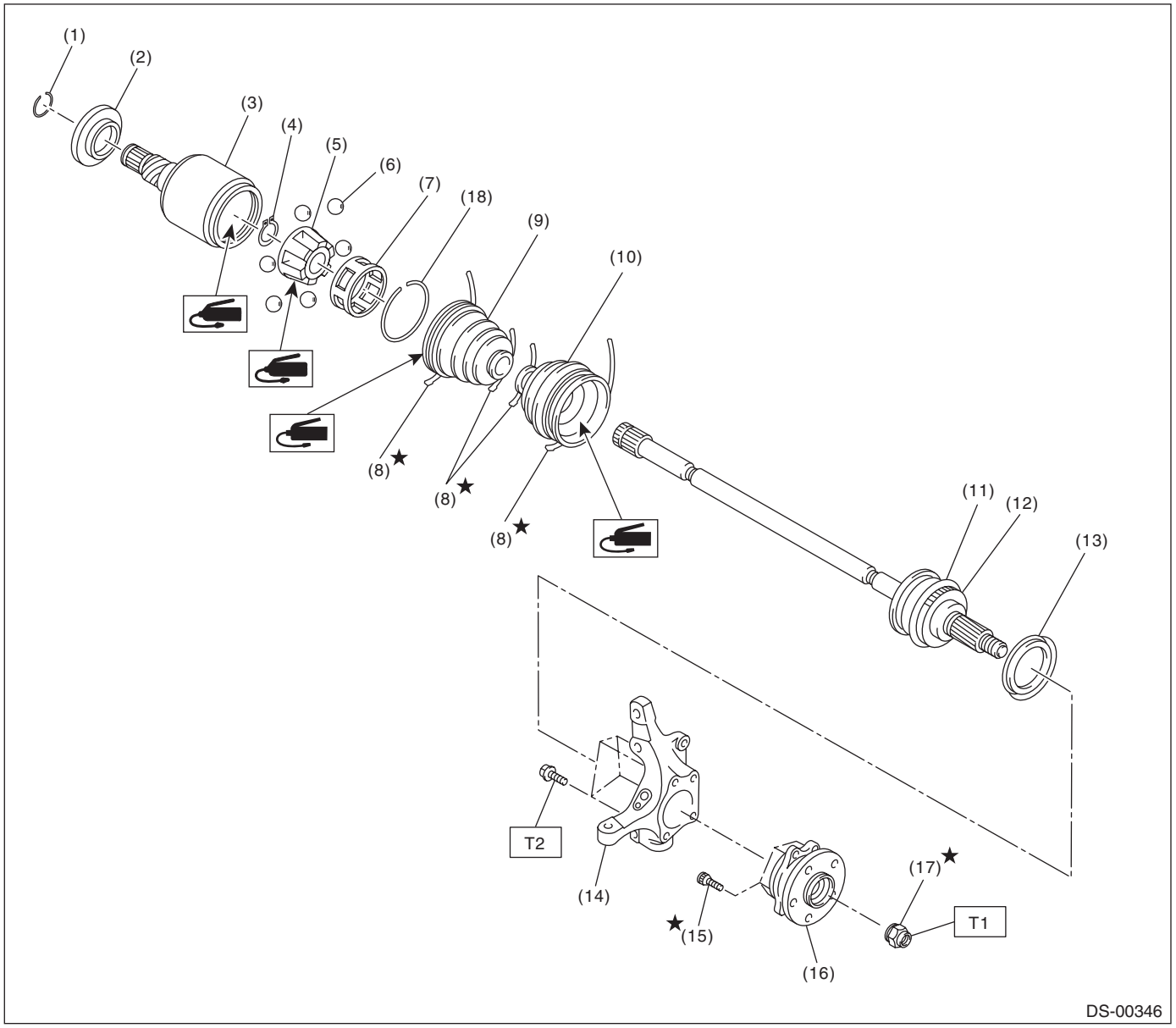


(1) Circlip
(2) Baffle plate
(3) Outer race (DOJ)
(4) Snap ring
(5) Inner race
(6) Ball
(7) Cage
(8) Boot band
(9) Boot (DOJ)
(10) Boot (BJ)
(11) BJ ASSY
(12) Tone wheel
(13) Baffle plate
(14) Housing
(15) Hub bolt
(16) Front hub unit bearing
(17) Axle nut
(18) Snap ring

***Tightening torque:N·m (kgf-m, ft-lb)***
***T1: 220 (22.4, 162)***
***T2: 65 (6.6, 47.9)***

## 3. REAR AXLE

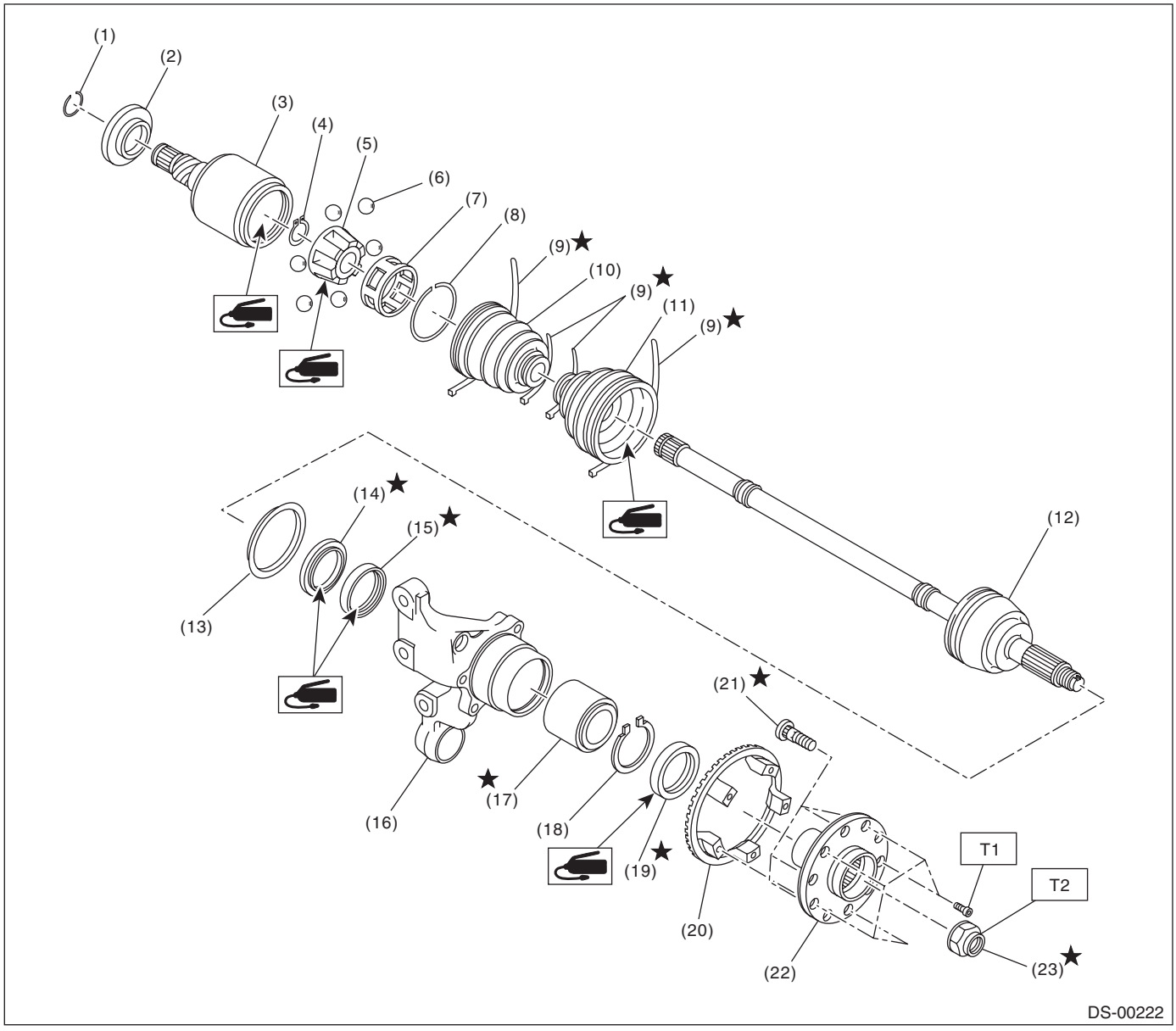


(1) Circlip
(2) Baffle plate (DOJ)
(3) Outer race DOJ: Except for STI model
Outer race EDJ: STI model
(4) Snap ring
(5) Inner race
(6) Ball
(7) Cage
(8) Snap ring
(9) Boot band
(10) DOJ boot
(11) Boot
(12) EBJ ASSY
(13) Baffle plate
(14) Inner oil seal 2
(15) Inner oil seal
(16) Housing
(17) Bearing
(18) Snap ring
(19) Outer oil seal
(20) Tone wheel
(21) Hub bolt
(22) Hub
(23) Axle nut

***Tightening torque:N·m (kgf-m, ft-lb)***
***T1: 13 (1.3, 9.4)***
***T2: 190 (19.4, 140)***

## C: CAUTION

- Wear appropriate work clothing, including a cap, protective goggles and protective shoes when performing any work.
- Remove contamination including dirt and corrosion before removal, installation or disassembly.
- Keep the disassembled parts in order and protect them from dust and dirt.
- Before removal, installation or disassembly, be sure to clarify the failure. Avoid unnecessary removal, installation, disassembly and replacement.
- Vehicle components are extremely hot after driving. Be wary of receiving burns from heated parts.
- Use SUBARU genuine grease etc. or equivalent. Do not mix grease etc. of different grades or manufacturers.
- Be sure to tighten fasteners including bolts and nuts to the specified torque.
- Place shop jacks or rigid racks at the specified points.
- Apply grease onto sliding or revolving surfaces before installation.
- Before installing snap rings, apply sufficient amount of grease to avoid damage and deformation.
- Before securing a part on a vise, place cushioning materials such as wood blocks, aluminum plates, or waste cloth between the part and the vise.

## D: PREPARATION TOOL

### 1. SPECIAL TOOL

| ILLUSTRATION | TOOL NUMBER | DESCRIPTION | REMARKS |
|---|---|---|---|
| 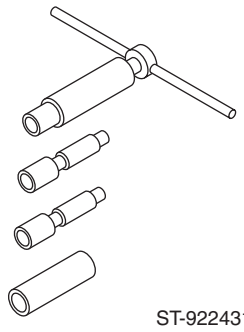 ST-922431000 | 922431000 | AXLE SHAFT INSTALLER | • Used for installing the axle shaft into housing.<br>• Used together with the ADAPTER (927390000). |
| 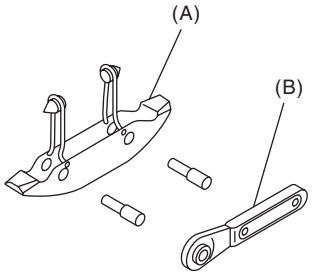  ST-925091000 | 925091000 | BAND TIGHTENING TOOL | Used for tightening the boot band.<br>(A) Jig for the band<br>(B) Ratchet wrench |
| 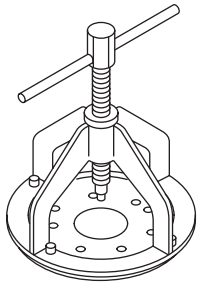 ST-926470000 | 926470000 | AXLE SHAFT PULLER | • Used for removing the axle shaft.<br>• Used together with AXLE SHAFT PULLER PLATE (28099PA110). |

| ILLUSTRATION | TOOL NUMBER | DESCRIPTION | REMARKS |
|---|---|---|---|
| 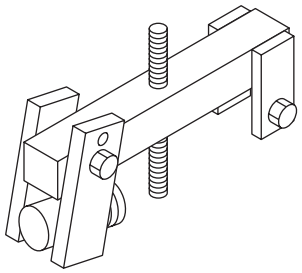 ST-927060000 | 927060000 | HUB REMOVER | • Used for removing front hub.<br>• Used together with the HUB STAND (927080000). |
| 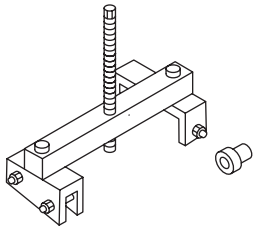 ST-927420000 | 927420000 | HUB REMOVER | • Used for removing rear hub.<br>• Used together with the HUB STAND (927080000). |
| 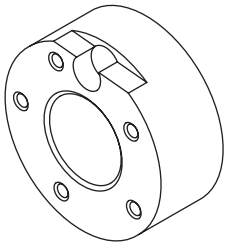 ST-927080000 | 927080000 | HUB STAND | Used for disassembling and assembling hub bolt.<br>(Except for STI model) |
| 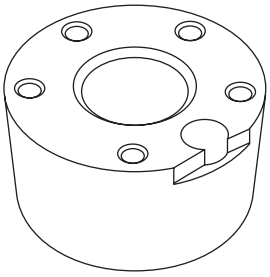 ST28099PA080 | 28099PA080 | HUB STAND | Used for disassembling and assembling hub bolt.<br>(STI model) |
| 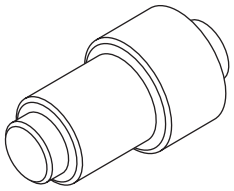 ST-927100000 | 927100000 | BEARING PULLER | • Used for disassembling and assembling the front housing bearing.<br>• Used together with the HOUSING STAND (927400000). (Except for STI model)<br>• Used together with the HOUSING STAND (28099PA060). (STI model) |

| ILLUSTRATION | TOOL NUMBER | DESCRIPTION | REMARKS |
|---|---|---|---|
| 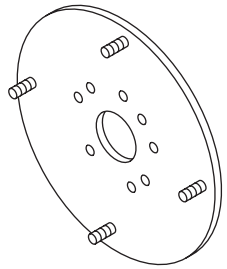 ST28099PA110 | 28099PA110 | AXLE SHAFT PULLER PLATE | Exchange with the plate of the AXLE SHAFT PULLER (926470000) to use. |
| 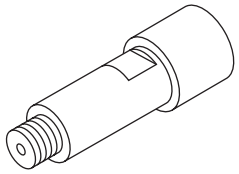 ST-927390000 | 927390000 | ADAPTER | Used as an adapter for AXLE SHAFT INSTALLER (922431000). |
| 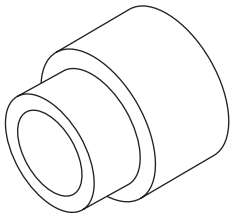 ST-927400000 | 927400000 | HOUSING STAND | • Used for disassembling and assembling the front housing bearing.<br>• Used together with the BEARING PULLER (927100000). |
| 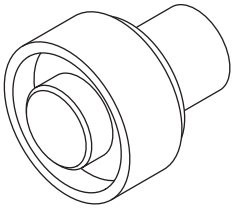 ST-927410000 | 927410000 | OIL SEAL INSTALLER | • Used for installing oil seal into front housing.<br>• Used together with the HOUSING STAND (927400000). |
| 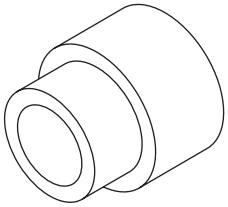 ST-927430000 | 927430000 | HOUSING STAND | • Used for disassembling and assembling rear housing bearing. (Except for STI model)<br>• Used together with the BEARING PULLER (927440000). |

| ILLUSTRATION | TOOL NUMBER | DESCRIPTION | REMARKS |
|---|---|---|---|
| 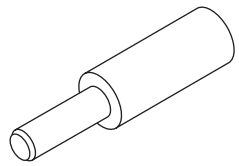 ST-927120000 | 927120000 | HUB INSTALLER | • Used for installing the front hub. (Except for STI model)<br>• Used for installing rear hub. (STI model)<br>• Used together with the HUB STAND (927080000). |
| 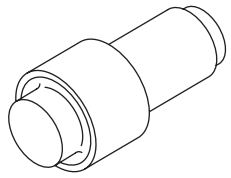 ST-927440000 | 927440000 | BEARING PULLER | • Used for disassembling and assembling the rear wheel bearing. (Except for STI model)<br>• Used together with the HOUSING STAND (927430000). |
| 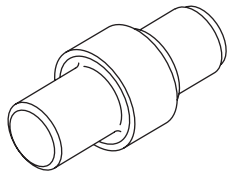 ST-927460000 | 927460000 | OIL SEAL INSTALLER | • Used for installing the outer oil seal. (Except for STI model)<br>• Used together with the HOUSING STAND (927430000). |
| 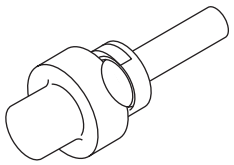 ST-927450000 | 927450000 | HUB INSTALLER | • Used for pressing in the hub bearing into the hub. (Except for STI model)<br>• Used together with the HUB STAND (927080000). |
| 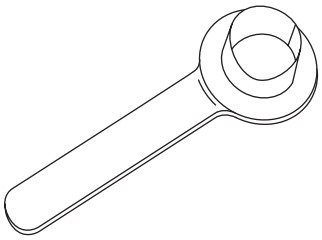 ST28099PA090 | 28099PA090 | OIL SEAL PROTECTOR | • Used for installing the rear drive shaft to the rear differential.<br>• For protecting the oil seal. |

| ILLUSTRATION | TOOL NUMBER | DESCRIPTION | REMARKS |
|---|---|---|---|
| 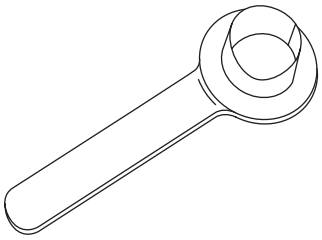 ST28399SA010 | 28399SA010 | OIL SEAL PROTECTOR | • Used for installing front drive shaft to transmission.<br>• For protecting the oil seal. |
| 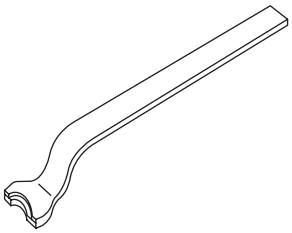 ST28099PA100 | 28099PA100 | DRIVE SHAFT REMOVER | Used for removing the rear drive shaft from the rear differential. |
| 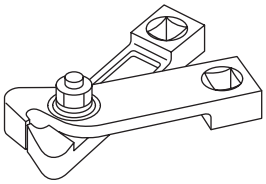 ST28099AC000 | 28099AC000 | BOOT BAND PLIER | Used for tightening front BJ boot band. |
| 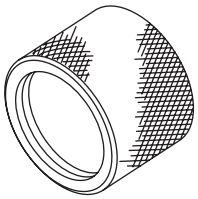 ST18675AA000 | 18675AA000 | DIFFERENTIAL SIDE OIL SEAL INSTALLER | Used for installing the differential side retainer oil seal. |
| 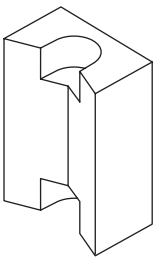 ST28399AG000 | 28399AG000 | HUB STAND | Used for extracting hub bolt. (STI model) |

| ILLUSTRATION | TOOL NUMBER | DESCRIPTION | REMARKS |
|---|---|---|---|
| 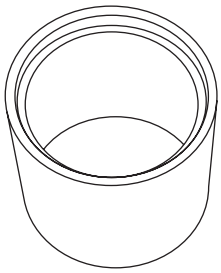 ST-28099PA060 | 28099PA060 | HOUSING STAND | • Used for disassembling and assembling rear housing bearing. (STI model)<br>• Used together with the BEARING PULLER (927100000). |
| 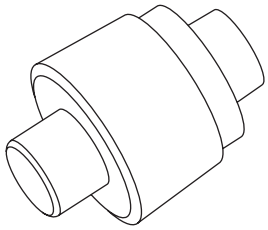 ST-28099PA070 | 28099PA070 | OIL SEAL INSTALLER | • Used for press-fitting rear housing oil seal. (STI model)<br>• Used together with the HOUSING STAND (28099PA060). |

## 2. GENERAL TOOL

| DESCRIPTION | REMARKS |
|---|---|
| Puller | Used for removing the ball joint from knuckle arm. |
| Dial gauge | Used for inspecting the propeller shaft run-out. |
| Snap ring pliers | Used for installing and removing the snap ring. |
| Bar | Used for extracting drive shaft. |